XFL100 and XFL150-SERIES

Explosion-proof Submersible Effluent Pumps for Hazardous Locations

Liberty Pumps®

A Family and Employee Owned Company

X-Series™

1 hp - XFL100-Series
1-1/2 hp - XFL150-Series
3/4" Solids handling
1-1/2" or 2" Discharge

Class 1, Division 1, Groups C and D
Class 1, Zone 1, Group IIA and IIB

Features

- Heavy cast iron construction
- Dual shaft seals
- Seal fail sensor
- Semi-open cast iron impeller (bronze optional)
- 303 Stainless-steel rotor shaft
- 1-1/2" Threads provided at power cords for optional conduit connection
- Surface temperature code T4

For use with ISS-Series and ISD-Series intrinsically safe control panels. Consult factory for proper control panel sizing.

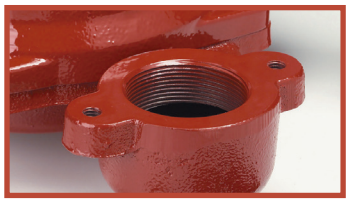

Dual Sized Discharge
1-1/2" or 2"

Patent: See libertypumps.com/wholesale/resource-center/patents

POWDER COATED TOUGH™

3 Year Warranty

SSPMA CERTIFIED

C SP US

Meets FM Standards

innovate. evolve.

XFL100-Series and XFL150-Series

Impeller

Cast Iron (standard), bronze option available (order "B" models)

Motor

Submersible type, oil-filled, hermetically sealed

Motor Housing

Class 30 heavy cast iron

Shaft

Dual seals, silicon carbide with BUNA-N elastomers and stainless-steel housing

Bearings

Upper and lower ball bearings

Thermal Protection

1-phase models - built into motor windings with automatic reset. 3-phase models require overloads in the control panel

Capacitor

External run capacitor required in control panel, 1-phase only

Seal Fail Sensor

Integral moisture sensing probe (functionality requires indicator in control panel – see ISS or ISD-Series control panels)

Max Fluid Temperature

104°F (40°C) Continuous duty

Dimensional Data

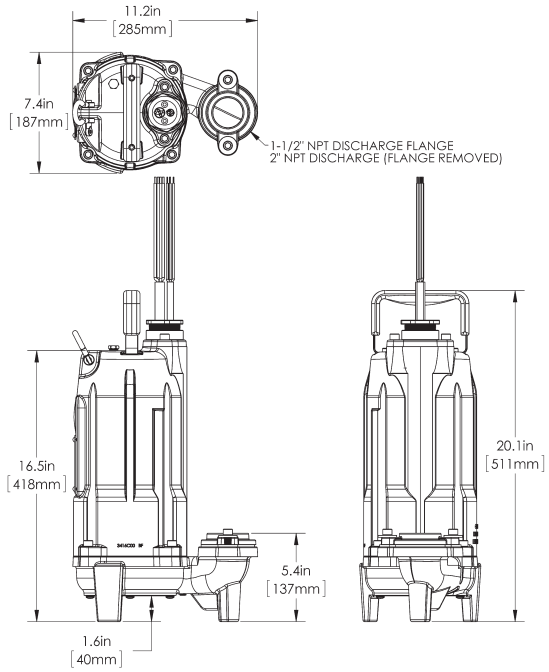

Performance Curve

60 Hz, 3450 RPM

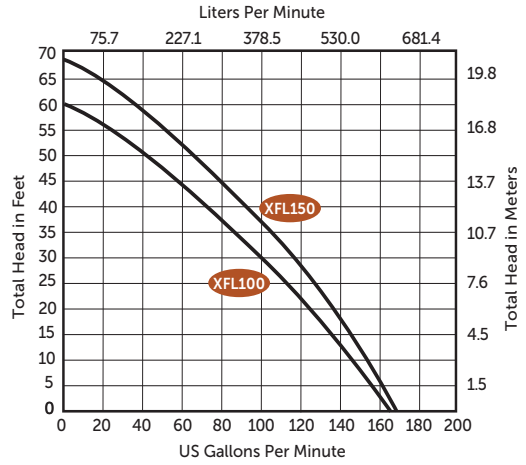

MODELS	HP	VOLTS	HZ	PHASE	FULL LOAD AMPS	CAPACITOR KIT	DISCHARGE SIZE	CORD LENGTH	WEIGHT IN LBS
XFL102M-2	1	208/230	60	1	11.5	K001585	1-1/2" & 2"	25'	93
XFL103M-2	1	208/230	60	3	8	N/A	1-1/2" & 2"	25'	93
XFL104M-2	1	440–480	60	3	4	N/A	1-1/2" & 2"	25'	93
XFL105M-2	1	575	60	3	3	N/A	1-1/2" & 2"	25'	93
XFL152M-2	1-1/2	208/230	60	1	12.5	K001585	1-1/2" & 2"	25'	93
XFL153M-2	1-1/2	208/230	60	3	9	N/A	1-1/2" & 2"	25'	93
XFL154M-2	1-1/2	440–480	60	3	4	N/A	1-1/2" & 2"	25'	93
XFL155M-2	1-1/2	575	60	3	3.2	N/A	1-1/2" & 2"	25'	93

25' cords standard. For 35' or 50' cords, add "-3" or "-5" suffix respectively. Example: XFL152M-5
Cast iron impeller standard. For bronze impeller add "B" to model number. Example: XFL102BM-2
3-phase models require a control panel with overloads properly sized for the pump. See intrinsically safe control panels.
ISS-Series (simplex) or ISD-Series (duplex) literature for complete control panel information. Consult factory for proper control panel sizing.

Specifications subject to change without notice.

Copyright © Liberty Pumps, Inc. 2026 All rights reserved. LLIT006756-R10/26

Liberty Pumps - 7000 Apple Tree Avenue - Bergen, New York 14416
Phone 800-543-2550 - Fax 585-494-1839 - LibertyPumps.com