ProVore® 380

Simplex Grinder System

Liberty Pumps®

A Family and Employee Owned Company

1 hp

2" Discharge

Compact simplex system - designed for residential sewage applications

Perfect for basement bathroom additions and remodeling projects

Available in 115V or 230V

Fully assembled from factory

Patent: See
LibertyPumps.com/en-us/patents

Features

- Robust system features a compact heavy-duty polyethylene basin and cover
- System can be installed above or below grade level
- 41 gallon capacity
- V-Slice® Cutter Technology shreds difficult solids such as feminine products, rags, towels and wipes that can jam solids handling pumps
- East access cover with QuickTree® technology – allows for quick float switch removal and servicing
- Heavy-duty integrated rubber gaskets on covers
- Secure 16 bolt cover standard on all models
- Passes 10' stack test

Shipped with Clear Construction Cover

Clear disposable cover protects the system during masonry work and rough-in

SSPMA CERTIFIED

C US

innovate. evolve.

ProVore® 380

ProVore® 380
QuickTree® Technology

Features

- QuickTree® Technology allows easy access and removal of float switches without disturbing pump or plumbing
- Integrated rubber seals permanently attached to cover
- Unique cord seal technology integrated into the inspection cover
- Shallow basin design (24") for easier installation in difficult soil/bedrock locations
- Large 41 gallon capacity for longer pump cycles
- Integrally molded torque stops secure the pump in its proper position
- Integrally molded anti-flotation collar
- Durable polyethylene construction
- Completely assembled

QuickTree® Technology

Integrated Rubber Seals

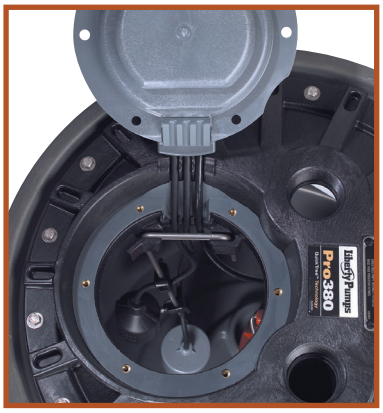

Unique integrated cord seal technology and permanent rubber cover gaskets

Patent: See LibertyPumps.com/en-us/patents

Dimensional Data

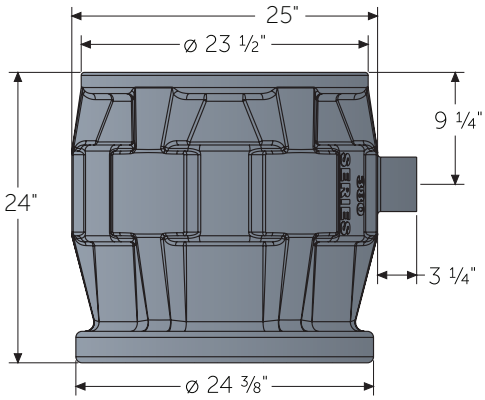

Models

MODEL	HP	VOLTS	PHASE	DISCHARGE	CORD LENGTH	WEIGHT IN LBS
P382XPRG101	1	115	1	2"	10'	87
P382XPRG101V	1	115	1	2"	10'	87
P382XPRG102	1	230	1	2"	10'	87

"V" model = vertical float switch. All other models are wide-angle.
See specific PRG-Series literature for complete pump performance and specifications.
For 25' power cord add "-2" suffix to model number.
Example: P382XPRG101-2
For side discharge models, see ProVore® SD-Series literature.

ProVore® 380 24"x24" - 41 Gallons

1 hp Grinder Package

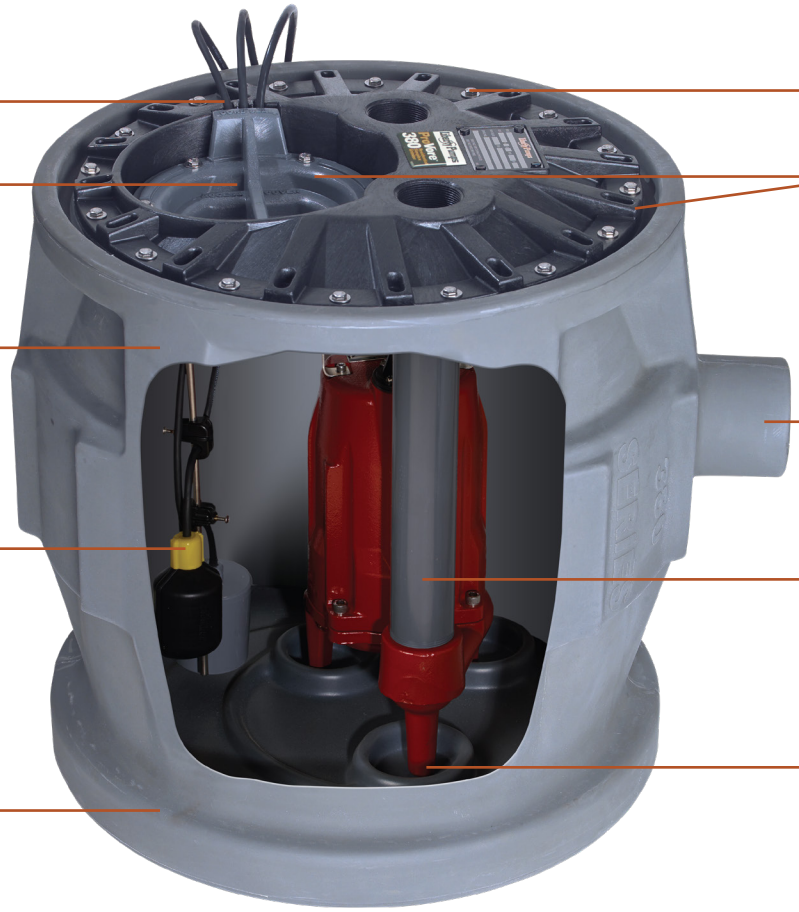

Patent: See
LibertyPumps.com/en-us/patents

Performance Curve

60 Hz, 3450 RPM

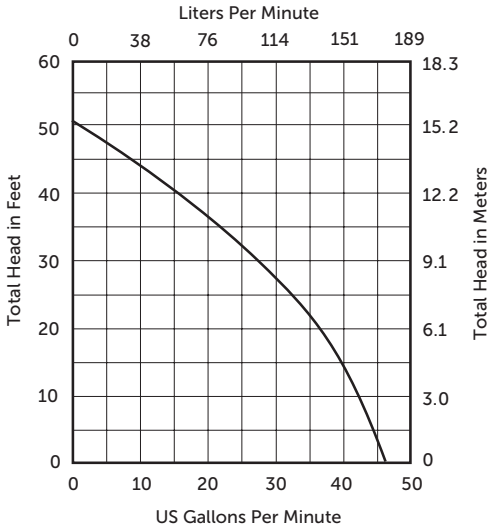

Liberty Pumps
NightEye®
Wireless Enabled Alarms
AVAILABLE

See back page for ordering information

IAPMO Listed Basins

The **ProVore® 380 Basin** is specifically designed to pass a 10' stack test and is IAPMO listed.

Optional Access Riser

Riser allows burial of the ProVore® 380 System up to a maximum depth of 18" below grade

A convenient chamber for all your pump's electrical and piping connections – out of sight and below grade. Riser simply slides over the sealed 380 system. Cover is retained by 4 stainless steel bolts and features a twist-lock design with provision for padlock to deter unwanted entry.

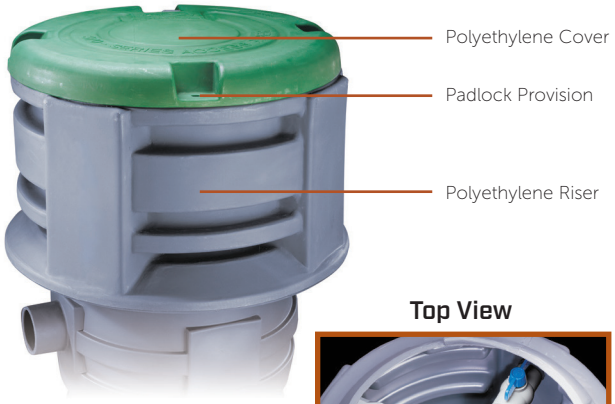

Top View

Specifications

Weight: 28 lbs (Riser and Cover)
Riser Height: 18-3/4"
Total Height with Cover: 20-1/2"
Diameter: 32"

MODEL	DESCRIPTION
AR18	Access Riser
AC18	Access Riser Cover (Environmental Green)
ARC18	Kit, Access Riser with Cover
ARCKIT115	Kit, Access Riser with Cover and 2" installation accessories - 115V
ARCKIT230	Kit, Access Riser with Cover and 2" installation accessories - 230V
IKIT2-115	Installation Kit 2", 115V
IKIT2-230	Installation Kit 2", 230V

Liberty Pumps installation kits provide all the components for a professional installation inside the riser. Kit includes: JB-series wiring box and hardware, check valve with a disconnect union feature, coupling and elbows (PVC piping not included). Kits available in 2" discharge and vent size only.

ProVore® 380 Alarmed System

Now have the assurance of early warning in the event of a high-level condition with an alarm option installed from the factory! We do the work for you by mounting the alarm float switch in the basin at its proper level – no need to even open the cover! Simply mount the alarm panel in its desired location, supply power, and connect the alarm float switch leads! Standard alarm and NightEye® wireless alarm available.

Liberty Pumps
NightEye®
Wireless Enabled Alarms
AVAILABLE

ALM-2-EYE Shown

Patent: See LibertyPumps.com/en-us/patents

How to Order

ALARM MODEL	DESCRIPTION	FLOAT SWITCH CORD	ADD SUFFIX	ORDER EXAMPLE
ALM-2	Standard indoor alarm	20'	/A2	P382XPRG101/A2
ALM-2-1	Standard indoor alarm	10'	/A21	P382XPRG101/A21
ALM-2-EYE	NightEye® wireless enabled	20'	/A2-EYE	P382XPRG101/A2-EYE
ALM-2W	Standard outdoor rated	20'	/A2W	P382XPRG101/A2W

Alarm float switch is pre-set at proper level in basin. Alarm panel packaged with unit.
See ALM or ALM-EYE Series literature for complete alarm specifications.

FREE app download

Specifications subject to change without notice.

Copyright Liberty Pumps, Inc. 2025 All rights reserved. LLIT006711-R07/25

Liberty Pumps - 7000 Apple Tree Avenue - Bergen, New York 14416
Phone 800-543-2550 - Fax 585-494-1839 - www.LibertyPumps.com