LSS200-SERIES

Sewage and Dewatering Pump

Liberty Pumps®

A Family and Employee Owned Company

commercialseries

2 hp

2-1/2" Solids handling

Open 2 vane impeller

3" ANSI discharge

Features

- Cast iron construction with epoxy powder coating
- Stainless steel hardware
- Silicon Carbide/Silicon Carbide seal
- Buna-N O-ring seals
- Quick-connect power cords in 35', 50', or 100' lengths
- Thermal protector on 1-phase models
- Cast iron impeller

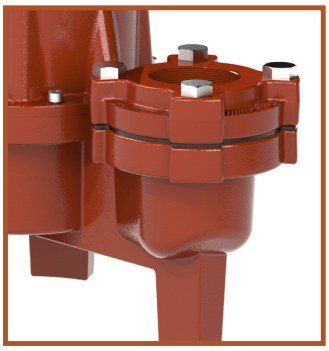

Vertical Discharge Option Available



Optional 3" to 4" ANSI Adapter Kit K001901 (sold separately)



Proudly made in the USA with US & global components

innovate. evolve.

LSS200-Series

Impeller

Cast iron open 2 vane

Finish

Epoxy powder coat

Max Fluid Temperature

104°F (40°C) Continuous duty

Motor

Oil-filled, Class F insulation

Power Cord Type

SOOW, Quick-connect 35', 50', or 100' length options

Motor Housing

Class 25 cast iron

Volute

Class 30 cast iron

Shaft

Stainless

Mechanical Shaft Seal

Silicon carbide on silicon carbide

Bearings

Upper and lower ball bearings

Warranty

18 Months from the date of installation or 24 months from the date of manufacture
See Liberty Pumps Limited Warranty - Wholesale Commercial Series

Performance Curve

60 Hz, 1725 RPM, 5' Minimum Head Required

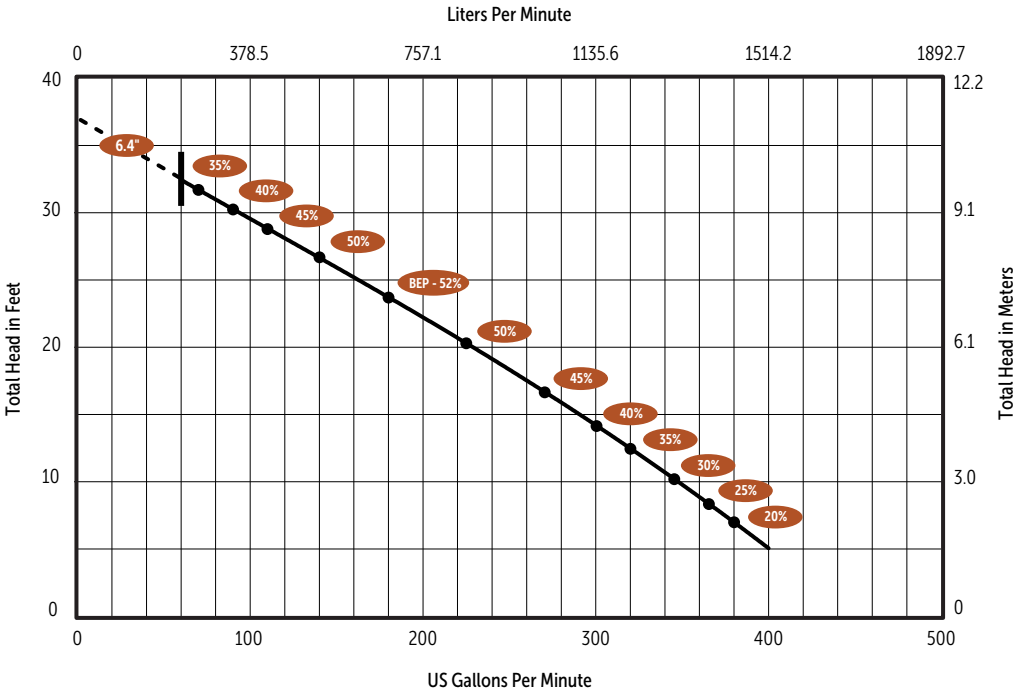

*Stated efficiencies are Hydraulic Efficiency.
Wire-to-Water efficiency information is available upon request.

Dimensional Data - ANSI Horizontal Discharge

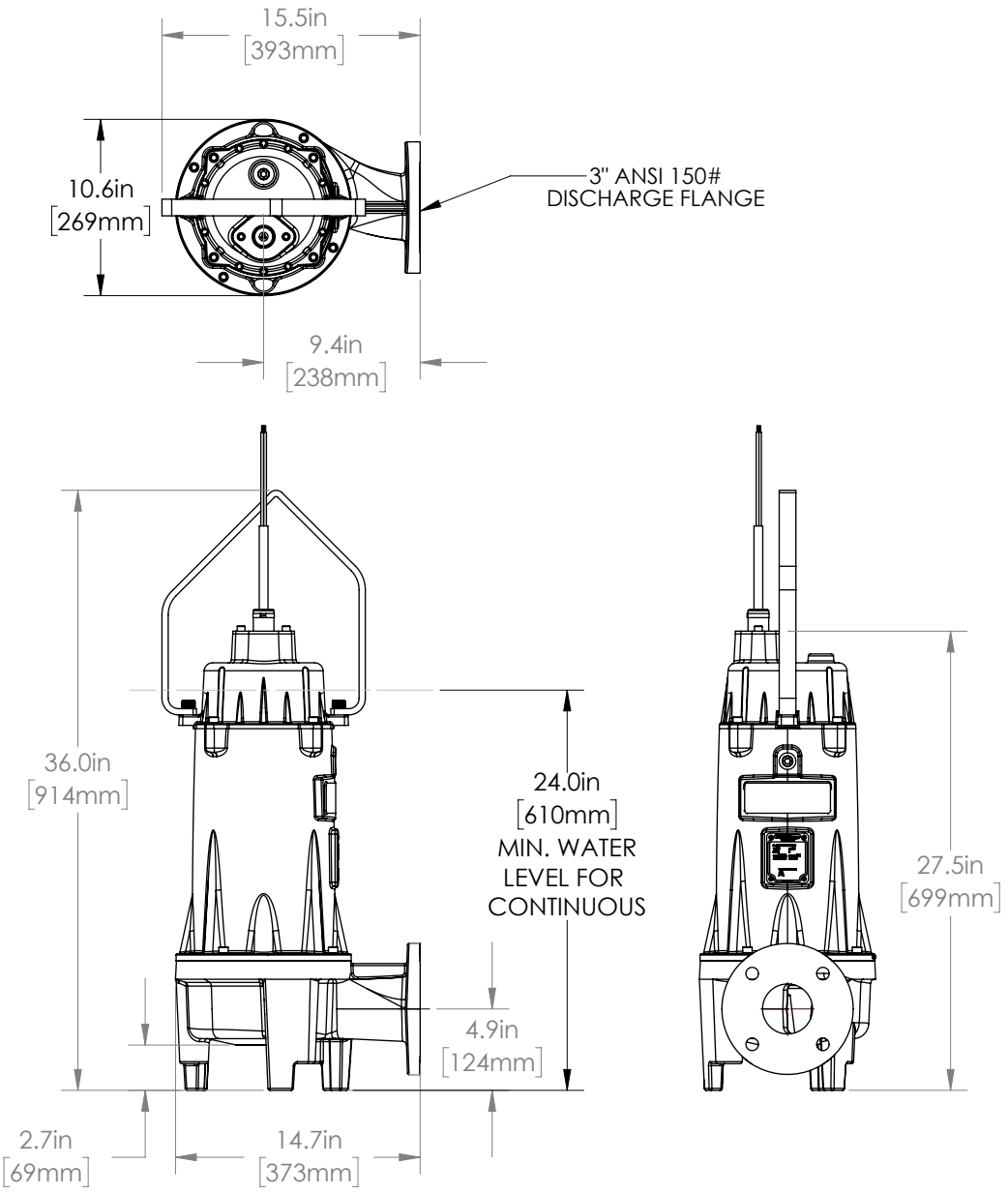

Models - Horizontal Discharge

MODEL	HP	VOLTS	PHASE	AMPS	DISCHARGE	WEIGHT in LBS (-3 MODELS)
LSS202	2	200/230	1	13.7	3" ANSI Horizontal	300
LSS203	2	200/230	3	9	3" ANSI Horizontal	300
LSS204	2	460	3	4.3	3" ANSI Horizontal	300
LSS205	2	575	3	3.4	3" ANSI Horizontal	300

For 35' cord option, add a "-3" suffix to model number. Example: LSS202-3
For 50' cord option, add "-5" suffix to model number. Example: LSS202-5
For 100' cord option, add "-1" suffix to model number. Example: LSS202-1
For a capacitor in the panel, add "-C" suffix to model number. Only available for LSS202. Example: LSS202-1-C

Dimensional Data - Vertical Discharge

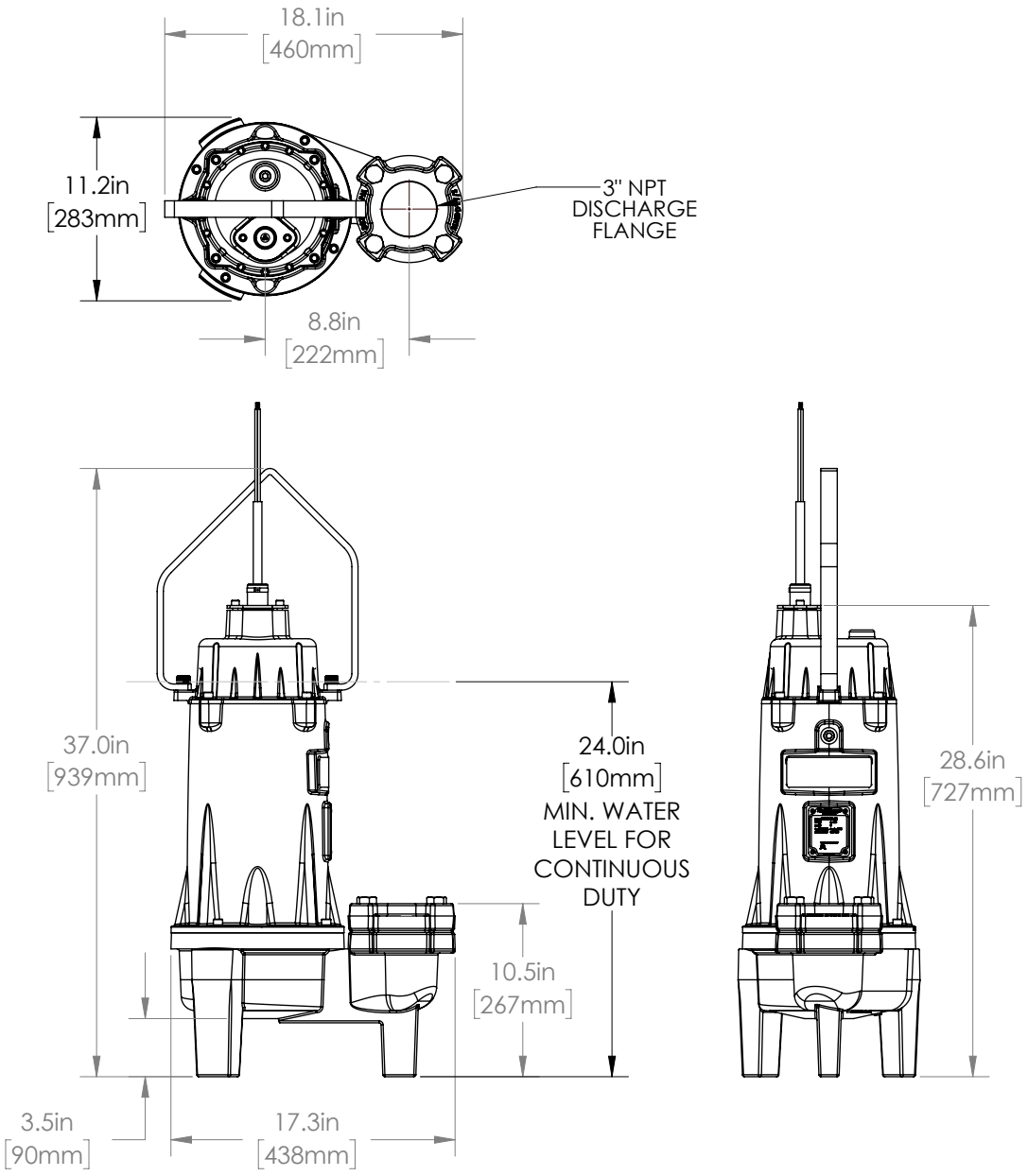

Models - Vertical Discharge

MODEL	HP	VOLTS	PHASE	AMPS	DISCHARGE	WEIGHT in LBS (-3 MODELS)
LSS202V	2	200/230	1	13.7	3" Vertical	300
LSS203V	2	200/230	3	9	3" Vertical	300
LSS204V	2	460	3	4.3	3" Vertical	300
LSS205V	2	575	3	3.4	3" Vertical	300

For 35' cord option, add a "-3" suffix to model number. Example: LSS202V-3
For 50' cord option, add "-5" suffix to model number. Example: LSS202V-5
For 100' cord option, add "-1" suffix to model number. Example: LSS202V-1
For a capacitor in the panel, add "-C" suffix to model number. Only available for LSS202V. Example: LSS202V-1-C

Specifications subject to change without notice.

Copyright © Liberty Pumps, Inc. 2026 All rights reserved. LLIT006791-R09/26

Liberty Pumps - 7000 Apple Tree Avenue - Bergen, New York 14416
Phone 800-543-2550 - Fax 585-494-1839 - LibertyPumps.com