CSP-SERIES

Crawl Space Sump Pump Kit

Liberty Pumps®

A Family and Employee Owned Company

1/3 or 1/2 hp

For dewatering under homes, basements, crawl space areas or where water may accumulate.

Features

- Heavy-duty submersible sump pump in 1/3 or 1/2 hp
- 15-3/4" x 16" perforated polyethylene sump pit with cover
- 24' x 1-1/4" flexible hose kit, polyethylene
- System is unassembled
- Check valve included



Controls problems with mold, fungus, moisture and structural damage. Reduces problems with rodents, insects and pests attracted to wet environments.

SSPMA CERTIFIED

C SA US

innovate. evolve.

CSP-Series

Kit Contents

- 15-3/4" x 16" Structural foam sump pit (perforated) and structural foam cover
- Automatic sump pump, 115V, with 10' power cord
- 24' Flexible hose kit, polyethlene 1-1/4" (Model DHK-24)
- Check valve threads directly into pump discharge

Note: System is unassembled

Performance Curve

60 Hz

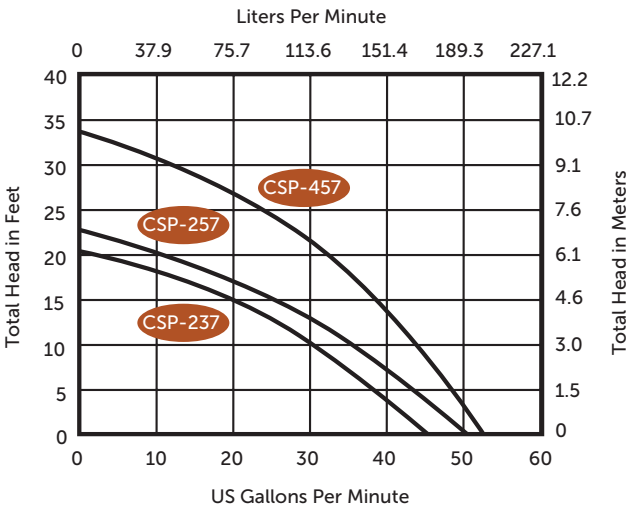

Dimensional Data

Top View

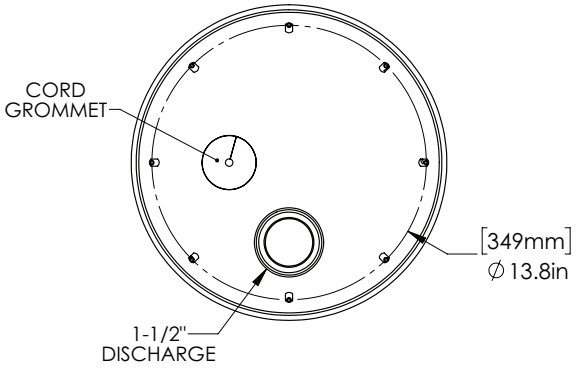

Side View

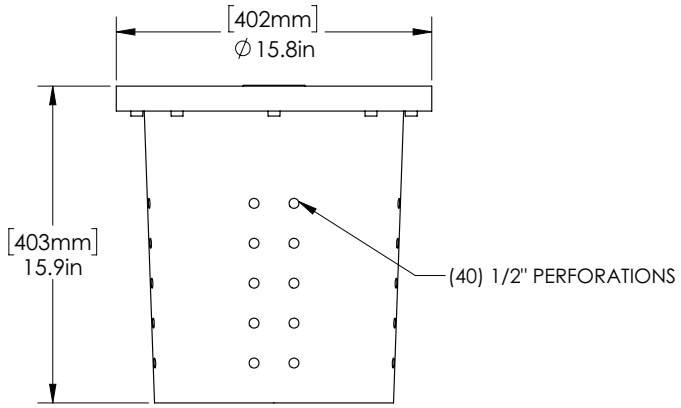

Max Fluid Temperature

140°F (60°C) Intermittent

Models

MODEL	HP	VOLTS	PUMP	PUMP MATERIAL	DISCHARGE HOSE	SYSTEM WEIGHT IN LBS
CSP-237	1/3	115	237	Poly/aluminum	Yes	23
CSP-457	1/2	115	457	Poly/aluminum	Yes	25
CSP-257	1/3	115	257	Cast iron	Yes	30
CSP-237-NH	1/3	115	237	Poly/aluminum	No	21

Add "-2" to CSP-237 model for a 25' cord. Example: CSP-237-2
See specific 230-Series, 250-Series or 450-Series literature for complete pump specifications.

Specifications subject to change without notice.
Copyright © Liberty Pumps, Inc. 2026 All rights reserved. LLIT006659-R11/26

Liberty Pumps - 7000 Apple Tree Avenue - Bergen, New York 14416
Phone 800-543-2550 - Fax 585-494-1839 - www.LibertyPumps.com