Liberty Pumps®

A Family and Emplyee Owned Company

# Pump **Specifications**

## 450-Series

### 1/2 hp Submersible Sump Pumps

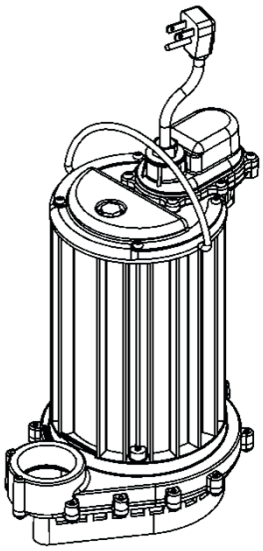

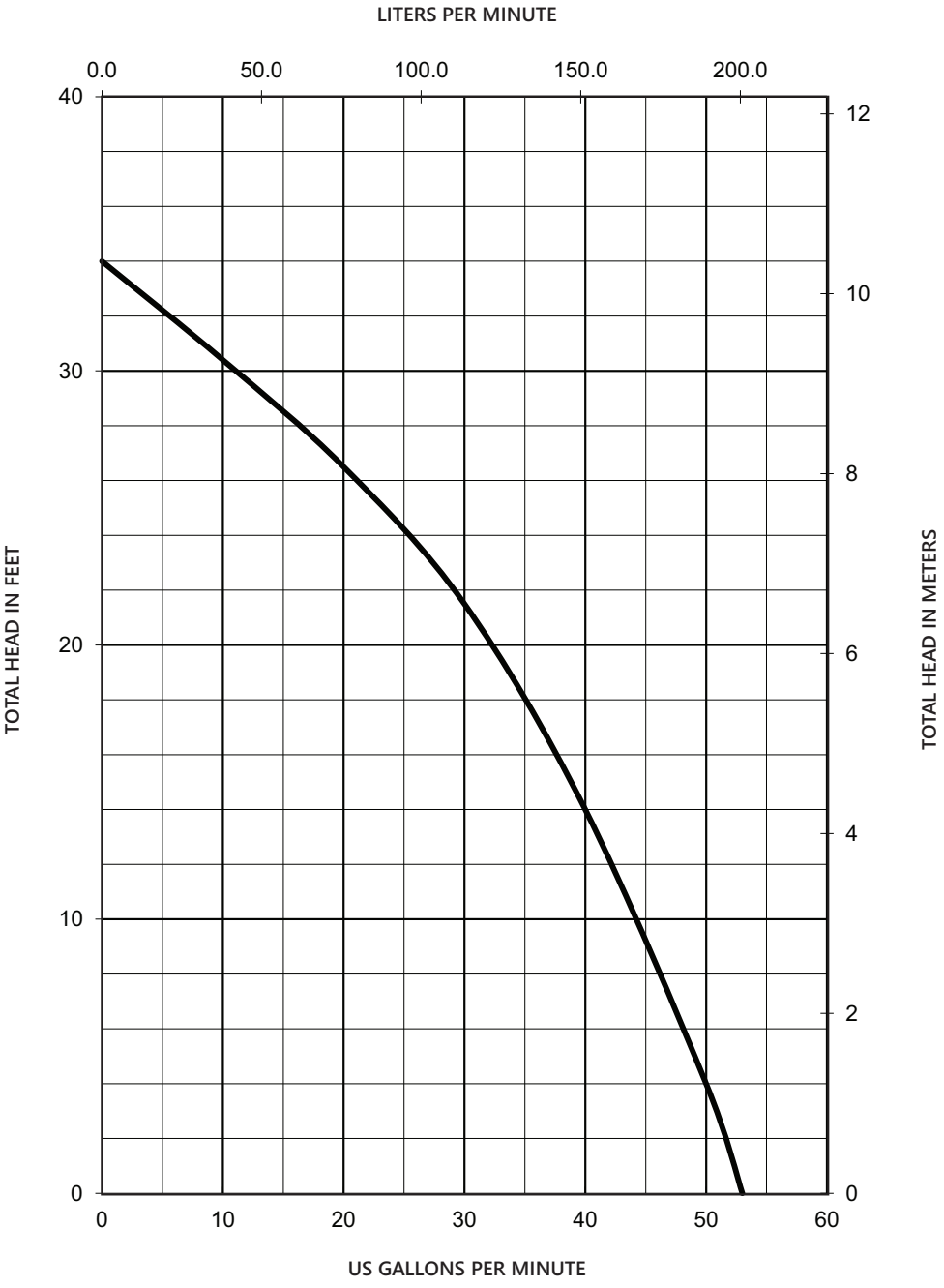


*Copyright © Liberty Pumps, Inc. 2026 All rights reserved. Specifications subject to change without notice.*



*7000 Apple Tree Avenue Bergen NY 14416* ■ ***Phone*** *1-800-543-2550* ■ ***Fax*** *1-585-494-1839* ■ ***Email*** *Liberty@LibertyPumps.com* ■ ***Web*** *www.LibertyPumps.com*

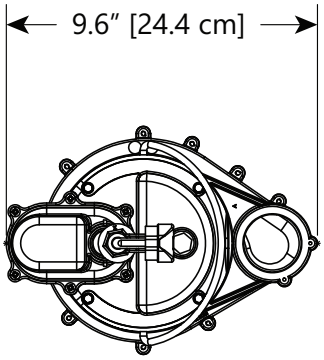


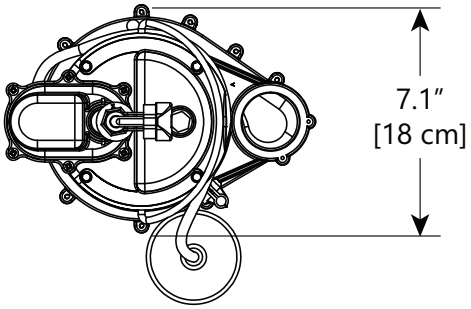


## Model 450

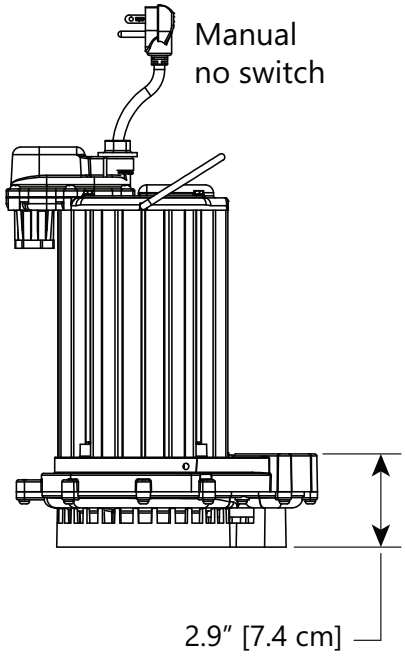


## Model 451

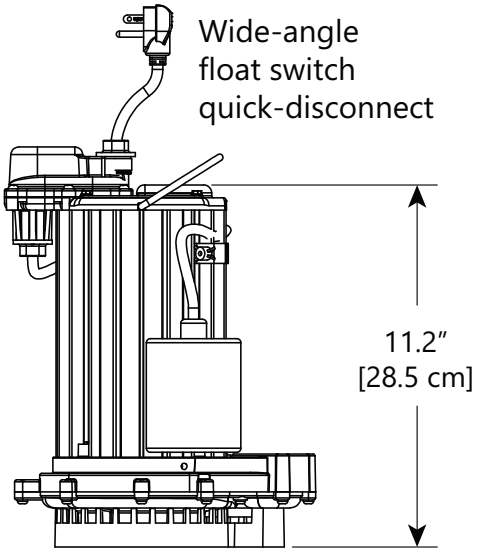


*Copyright © Liberty Pumps, Inc. 2026 All rights reserved. Specifications subject to change without notice.*


*7000 Apple Tree Avenue Bergen NY 14416 ■ **Phone** 1-800-543-2550 ■ **Fax** 1-585-494-1839 ■ **Email** Liberty@LibertyPumps.com ■ **Web** www.LibertyPumps.com*

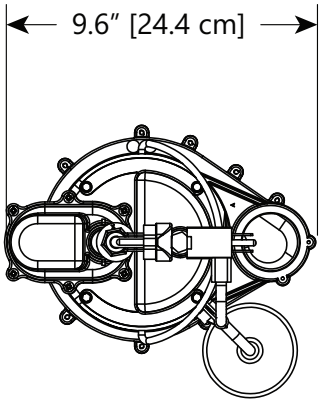


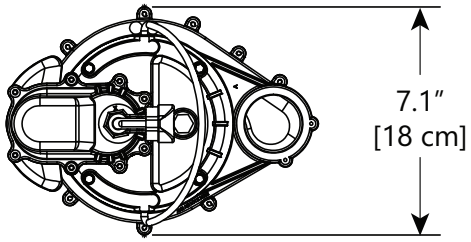


**Model 453**

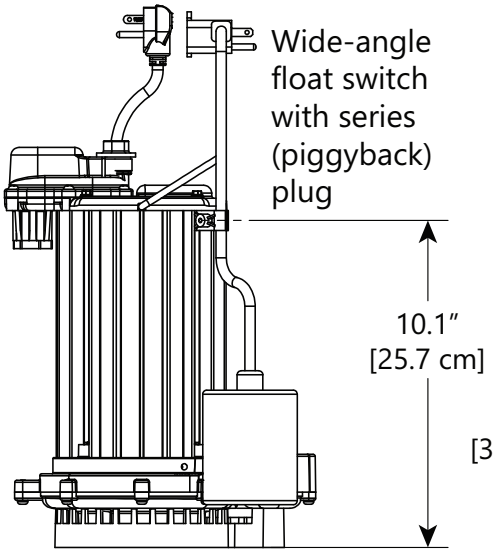


**Model 457**

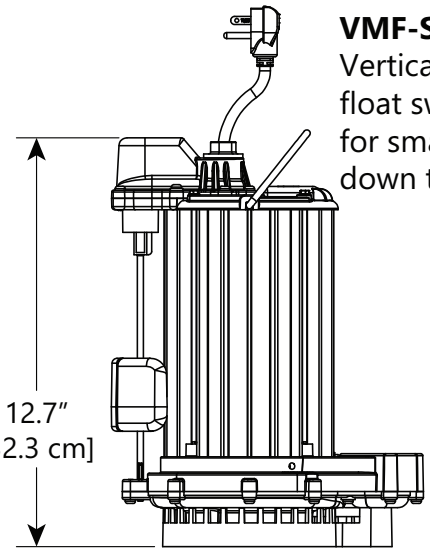


**VMF-SERIES**
Vertical magnetic
float switch
for smaller pits
down to 10″ diameter

*Copyright © Liberty Pumps, Inc. 2026 All rights reserved. Specifications subject to change without notice.*

*7000 Apple Tree Avenue Bergen NY 14416* ■ ***Phone*** *1-800-543-2550* ■ ***Fax*** *1-585-494-1839* ■ ***Email*** *Liberty@LibertyPumps.com* ■ ***Web*** *www.LibertyPumps.com*

## *450-Series Electrical Data*

| MODEL | HP | VOLTAGE | PHASE | FULL LOAD AMPS | LOCKED ROTOR AMPS | THERMAL OVERLOAD TEMP | STATOR WINDING CLASS | CORD LENGTH [FT] | DISCHARGE | AUTOMATIC |
|---|---|---|---|---|---|---|---|---|---|---|
| 450 | 1/2 | 115 | 1 | 7.3 | 16 | 120°C / 248°F | B | 10 | 1-1/2″ | NO MANUAL |
| 450HV | 1/2 | 230 | 1 | 3.5 | 7 | 120°C / 248°F | B | 10 | 1-1/2″ | NO MANUAL |
| 450-2 | 1/2 | 115 | 1 | 7.3 | 16 | 120°C / 248°F | B | 25 | 1-1/2″ | NO MANUAL |
| 450HV-2 | 1/2 | 230 | 1 | 3.5 | 7 | 120°C / 248°F | B | 25 | 1-1/2″ | NO MANUAL |
| 451 | 1/2 | 115 | 1 | 7.3 | 16 | 120°C / 248°F | B | 10 | 1-1/2″ | YES INTEGRAL FLOAT |
| 451-2 | 1/2 | 115 | 1 | 7.3 | 16 | 120°C / 248°F | B | 25 | 1-1/2″ | YES INTEGRAL FLOAT |
| 453 | 1/2 | 115 | 1 | 7.3 | 16 | 120°C / 248°F | B | 10 | 1-1/2″ | YES PIGGYBACK FLOAT |
| 453-2 | 1/2 | 115 | 1 | 7.3 | 16 | 120°C / 248°F | B | 25 | 1-1/2″ | YES PIGGYBACK FLOAT |
| 457 | 1/2 | 115 | 1 | 7.3 | 16 | 120°C / 248°F | B | 10 | 1-1/2″ | YES INTEGRAL VERTICAL FLOAT |
| 457-2 | 1/2 | 115 | 1 | 7.3 | 16 | 120°C / 248°F | B | 25 | 1-1/2″ | YES INTEGRAL VERTICAL FLOAT |

*Copyright © Liberty Pumps, Inc. 2026 All rights reserved. Specifications subject to change without notice.*

*7000 Apple Tree Avenue Bergen NY 14416 ■ **Phone** 1-800-543-2550 ■ **Fax** 1-585-494-1839 ■ **Email** Liberty@LibertyPumps.com ■ **Web** www.LibertyPumps.com*

## *450-Series Technical Data*

| | |
|---|---|
| **IMPELLER** | VORTEX, ENGINEERED POLYMER |
| **SOLIDS HANDLING SIZE** | 3/8" |
| **PAINT** | POWDER COAT |
| **MAX LIQUID TEMP** | 60°C / 140°F |
| **MAX STATOR TEMP** | CLASS B<br>130°C / 266°F |
| **THERMAL OVERLOAD** | 120°C / 248°F |
| **POWER CORD TYPE** | SJTW |
| **MOTOR HOUSING** | ALUMINUM |
| **VOLUTE** | ENGINEERED THERMOPLASTIC |
| **SHAFT** | STAINLESS STEEL |
| **HARDWARE** | STAINLESS STEEL |
| **O-RINGS** | BUNA-N |
| **SEAL** | ENGINEERED DOUBLE LIP SEAL WITH STAINLESS STEEL SPRINGS |
| **APPROX WEIGHT** | 5.7 KG / 12.5 LBS |
| **CERTIFICATIONS** | SSPMA, cCSAus (60 Hz models only) |

*Copyright © Liberty Pumps, Inc. 2026 All rights reserved. Specifications subject to change without notice.*

*7000 Apple Tree Avenue Bergen NY 14416 ■ **Phone** 1-800-543-2550 ■ **Fax** 1-585-494-1839 ■ **Email** Liberty@LibertyPumps.com ■ **Web** www.LibertyPumps.com*

## 1.01 GENERAL

The contractor shall provide labor, material, equipment, and incidentals required to provide _____ (QTY) centrifugal pumps as specified herein. The pump models covered in this specification are 450-Series single-phase pumps. The pump furnished for this application shall be model _____ as manufactured by Liberty Pumps.

## 2.01 OPERATING CONDITIONS

Each submersible pump shall be rated at 1/2 hp, ____ volts, 1-phase, 60 Hz, 3450 RPM. The unit shall produce _____ GPM at _____ feet of total dynamic head.

The submersible pump shall have 3/8" solid handling capability and be able to handle liquid temperatures to 140°F. The submersible pump shall have a shut-off head of 34 feet and a maximum flow of 52 GPM @ 0 feet of total dynamic head.

The pump shall be controlled with a wide-angle, high-temperature rated float switch with piggyback style plug.

## 3.01 CONSTRUCTION

Each centrifugal sump pump shall be equal to the C SP US Certified 450-Series pumps as manufactured by Liberty Pumps, Bergen NY. The motor housing is powder-coated aluminum construction. The motor housing shall be oil-filled to dissipate heat. Air-filled motors shall not be considered equal since they do not properly dissipate heat from the motor. All mating parts shall be sealed with a Buna-N O-ring. All fasteners exposed to the liquid shall be stainless steel. The motor shall be protected on the top side with a sealed cord entry plate with molded pins to conduct electricity eliminating the ability of water to enter internally through the cord. The motor shall be protected on the lower side with an engineered double lip seal with stainless steel springs. The pump shall be furnished with stainless steel handle.

## 4.01 ELECTRICAL POWER CORD

The submersible pump shall be supplied with 10 or 25 feet of multiconductor power cord. It shall be cord type SJTW, capable of continued exposure to the pumped liquid. The power cord shall be sized for the rated full load amps of the pump in accordance with the National Electric Code (NEC). The power cable shall not enter the motor housing directly but will conduct electricity to the motor by means of a water tight compression fit cord plate assembly, with molded pins to conduct electricity. This will eliminate the ability of water to enter internally through the cord by means of a damaged or wicking cord.

## 5.01 MOTORS

All motors shall be oil-filled, permanent split capacitor, Class B insulated NEMA B design, rated for continuous duty. At maximum load the winding temperature shall not exceed 130°C unsubmerged. Since air-filled motors are not capable of dissipating heat they shall not be considered equal. The pump motor shall have an integral thermal overload switch in the windings for protecting the motor. The capacitor circuit shall be mounted internally in the pump.

## 6.01 BEARINGS AND SHAFT

Upper and lower ball bearings shall be required. The bearings shall be a single ball/race type bearing. Both bearings shall be permanently lubricated by the oil that fills the motor housing. The motor shaft shall be made of 300 or 400 series stainless steel and have a minimum diameter of 0.311".

*Copyright © Liberty Pumps, Inc. 2026 All rights reserved. Specifications subject to change without notice.*

*7000 Apple Tree Avenue Bergen NY 14416 ■ **Phone** 1-800-543-2550 ■ **Fax** 1-585-494-1839 ■ **Email** Liberty@LibertyPumps.com ■ **Web** www.LibertyPumps.com*

## 7.01 SEALS

The pump shall have an engineered double lip seal with stainless steel springs. The motor plate/housing interface shall be sealed with a Buna-N O-ring.

## 8.01 IMPELLER

The impeller shall be engineered polymer, with pump out vanes on the back shroud to keep debris away from the seal area. It shall be threaded to the motor shaft.

## 9.01 CONTROLS

All pumps can be supplied with a CSA and UL-approved VMF type switch, an integrally wired wide-angle tilt float switch, or piggyback type wide-angle tilt float switches. The piggyback style switches are equipped with a plug that allows the pump to be operated manually without the removal of the pump in the event that a switch becomes inoperable. Manual pumps are operable by means of a pump control panel.

## 10.01 PAINT

The exterior of the aluminum shall be protected with powder coat paint.

## 11.01 SUPPORT

Plastic components that enclose the motor are molded from high temperature engineered thermoplastic.

## 12.01 SERVICEABILITY

Components required for the repair of the pump shall be shipped within a period of 24 hours.

## 13.01 TESTING

The pump shall have a ground continuity check and the motor chamber shall be hi-potted to test for electrical integrity, moisture content and insulation defects. The motor and volute housing shall be pressurized, and an air leak decay test performed to ensure integrity of the motor housing. The pump shall be run at rated voltage to verify current, performance curve and monitor operation.

## 14.01 QUALITY CONTROL

The pump shall be manufactured in an ISO 9001 certified facility.

## 15.01 WARRANTY

Standard limited warranty shall be 3 years.

*Copyright © Liberty Pumps, Inc. 2026 All rights reserved. Specifications subject to change without notice.*

*7000 Apple Tree Avenue Bergen NY 14416* ■ ***Phone*** *1-800-543-2550* ■ ***Fax*** *1-585-494-1839* ■ ***Email*** *Liberty@LibertyPumps.com* ■ ***Web*** *www.LibertyPumps.com*