Liberty Pumps®

Engineered Products

3LM05-Series

Monovane

5 hp

Ordinary Location

60 Hz

Patent: See
www.LibertyPumps.com/LEP/patents

- 3" Solids handling
- Horizontal 4" discharge
- Standard Quick-connect power and control cords

Technical Data

Performance Curve

Dimensional Data

Specifications and Construction

Proudly built in the USA with
US and global components

Submersible Wastewater Pump Association swpa MEMBER

C US

Liberty Pumps
Engineered Products

Technical Data

3LM05-Series - 60 Hz

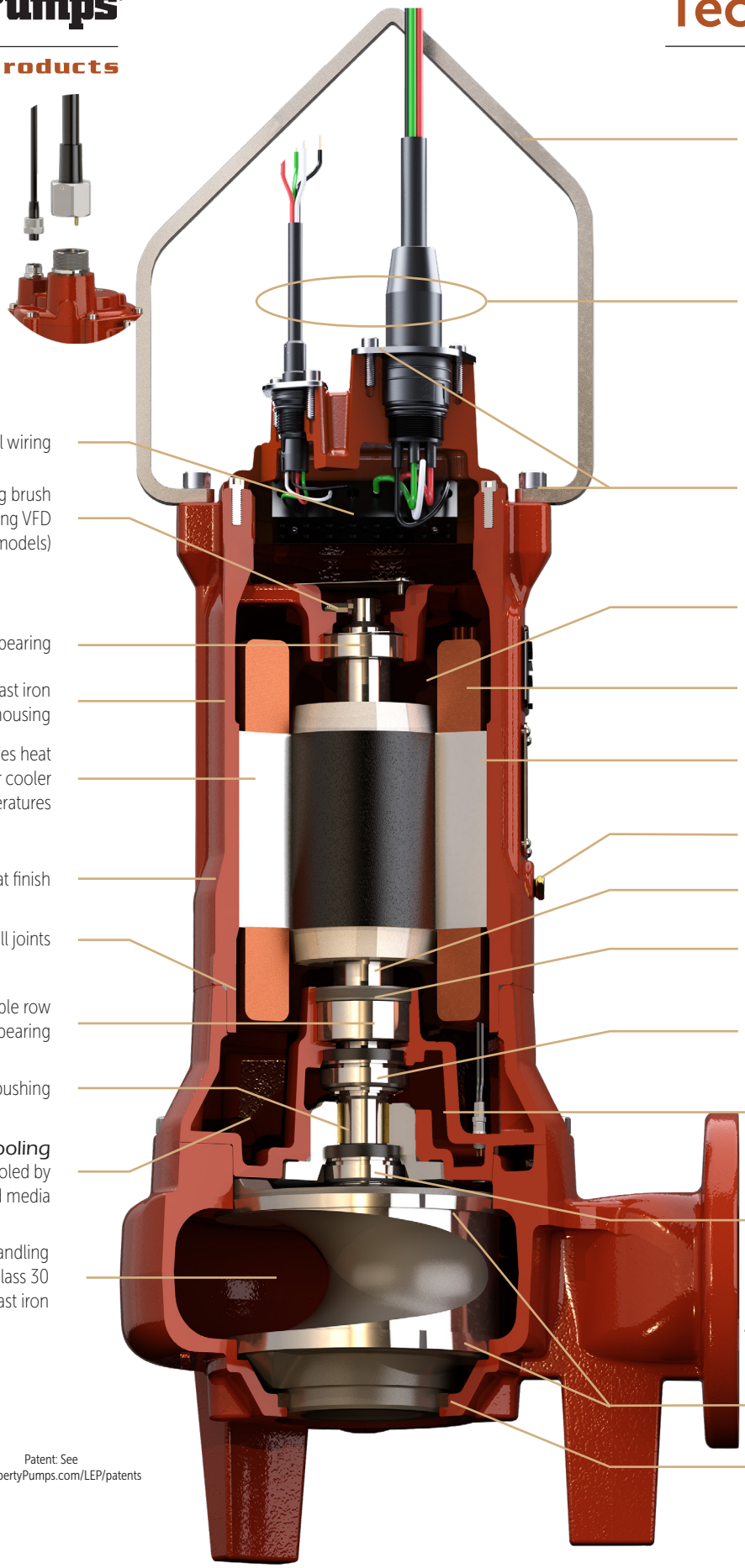

Optional heavy-duty quick-connect cords

Stainless steel lifting bale - sized for ease of use

Standard quick-connect cords

Terminal block for internal wiring

Rotor shaft grounding brush protects bearings during VFD operation (3-phase models)

All hardware 316 stainless steel

Oil-filled motor chamber cools motor and lubricates bearings

Upper deep groove ball bearing

Heavy-duty Class 30 cast iron motor housing

Inverter duty rated Class H insulation

Press fit stator enhances heat transfer allowing for cooler motor temperatures

NEMA® IE3 premium efficiency motor construction

Stator locking pin prevents stator movement

Protective powder coat finish

One piece 416 stainless steel rotor shaft

Buna-N O-rings seal all joints

Bearing locking ring eliminates axial shaft movement

Lower bearing double row angular contact ball bearing

Upper (inner) seal - graphite impregnated carbon on silicon carbide with Viton® elastomers and stainless steel components

Bronze shaft bushing

Seal leak detection, 2-probe sensor with resistor

MidTherm™ Cooling
Allows oil to be cooled by pumped media

Lower (outer) seal - silicon carbide on silicon carbide with Viton® elastomers and stainless steel components (other options available)

High-efficiency solids handling monovane impeller Class 30 cast iron

4" 150# ANSI® (DIN 100-PN10) flange

ClearNotch™ Technology
Material cleanout slots

Serviceable impeller wear ring

Patent: See
www.LibertyPumps.com/LEP/patents

Liberty Pumps
Engineered Products

Technical Data

3LM05-Series - 60 Hz

Model Number	3LM052A	3LM053A	3LM054A	3LM055A
HP	5	5	5	5
Volts	230	200/230*	460	575
Phase	1**	3	3	3
Hz	60	60	60	60
RPM	1750	1750	1750	1750
FLA	24.5	17.6/16	8.0	6.5
SFA	28	21.2/19.2	9.4	7.8
LRA	129	120	59.3	38.9
Max kW Input	5.4	5.2	5.2	5.2
NEMA Code	–	A	A	A
Service Factor	1.3	1.3	1.3	1.3
Power Factor (%)	98	80	80	80
KVA Code	F	M	M	K
Motor Efficiency @ Full Load (%)	85.6	89.5	89.5	88.7
Std Impeller Diameter (in)	7.25	7.25	7.25	7.25
Shut-Off Head w/Std Impeller (ft)	54	54	54	54
Max Usable Head w/Std Impeller (ft)	46	46	46	46
Min Head w/Std Impeller (ft)	12	12	12	12
Max Flow @ Min Head (GPM)	630	630	630	630
Power Cord Type & Diameter	Type W, 1 in	SOOW, 0.72 in	SOOW, 0.72 in	SOOW, 0.72 in

** System voltages: 208 and 240 volts with utilization voltages: 200 and 230 volts. These pumps are able to be rewired to 460 volts in the field.*

*** Single-phase motors require capacitors. Liberty Pumps control panel or capacitor kits are recommended for proper operation and warranty. Refer to "Control Panel" section.*

Technical Data

3LM05-Series - 60 Hz

Motor Insulation Class	H 180°C
Impeller Type	Precision Balanced Monovane
Impeller Material	Class 30 Cast Iron
Control Cord Type & Diameter	18/5 SOOW, 0.375 in
Power Cord Length (Options)	35, 50, 100 ft
Standard Quick-connect Cords	Standard
Heavy-duty Quick-connect Cords	Optional
Upper (Inner) Seal Material	Graphite Impregnated Carbon - Rotating Silicon Carbide - Stationary Viton® Elastomers
Lower (Outer) Seal Material (Standard)	Silicon Carbide on Silicon Carbide Viton® Elastomers
Lower (Outer) Seal Material (Optional)	Tungsten Carbide on Tungsten Carbide Viton® Elastomers
Max Water Temp for Continuous Duty	40°C
Min Fluid Level for Continuous Operation	Motor Housing Fully Submerged
Fluid pH Range	4–10
Starts Per Hour	30
Shaft Material	416 Stainless Steel

Fastener Material	316 Stainless Steel
O-Ring Elastomers	Buna-N
Upper Bearing	Single Row Deep Groove
Lower Bearing	Double Row Angular Contact
Oil Type	ISO® VG10 Turbine Oil
Max Submersion Depth	75 ft
Solids Handling	3 in
Discharge	Horizontal 4 in 150# ANSI® (DIN 100-PN10)
Protective External Finish	Powder Coat
Seal Fail Detection	Dual Probe - 2 Wire with Resistor 200K ohm Resistance
Thermal Protection	1-phase - 2 Hermetically Sealed Thermostats 3-phase - 3 Hermetically Sealed Thermostats 125°C Opening Temperature 105°C Closing Temperature 3A @ 120VAC, 1A @ 240 VAC
Volute Material	Class 30 Cast Iron
Pump Weight	340 lbs (approx)
Certifications	CSA Certified to CSA and UL® Standards CAN/CSA C22.2 No. 108-14 ANSI/UL 778 6th Ed

Specifications are subject to change without notice.

Copyright © Liberty Pumps, Inc. 2026
All rights reserved. LLIT3LM05-TD R04/26

7000 Apple Tree Avenue - Bergen, NY 14416
Phone 800-543-2550 - Fax 585-494-1839 - www.LibertyPumps.com/LEP

Liberty Pumps
Engineered Products

Performance Curve

3LM05-Series - 60 Hz

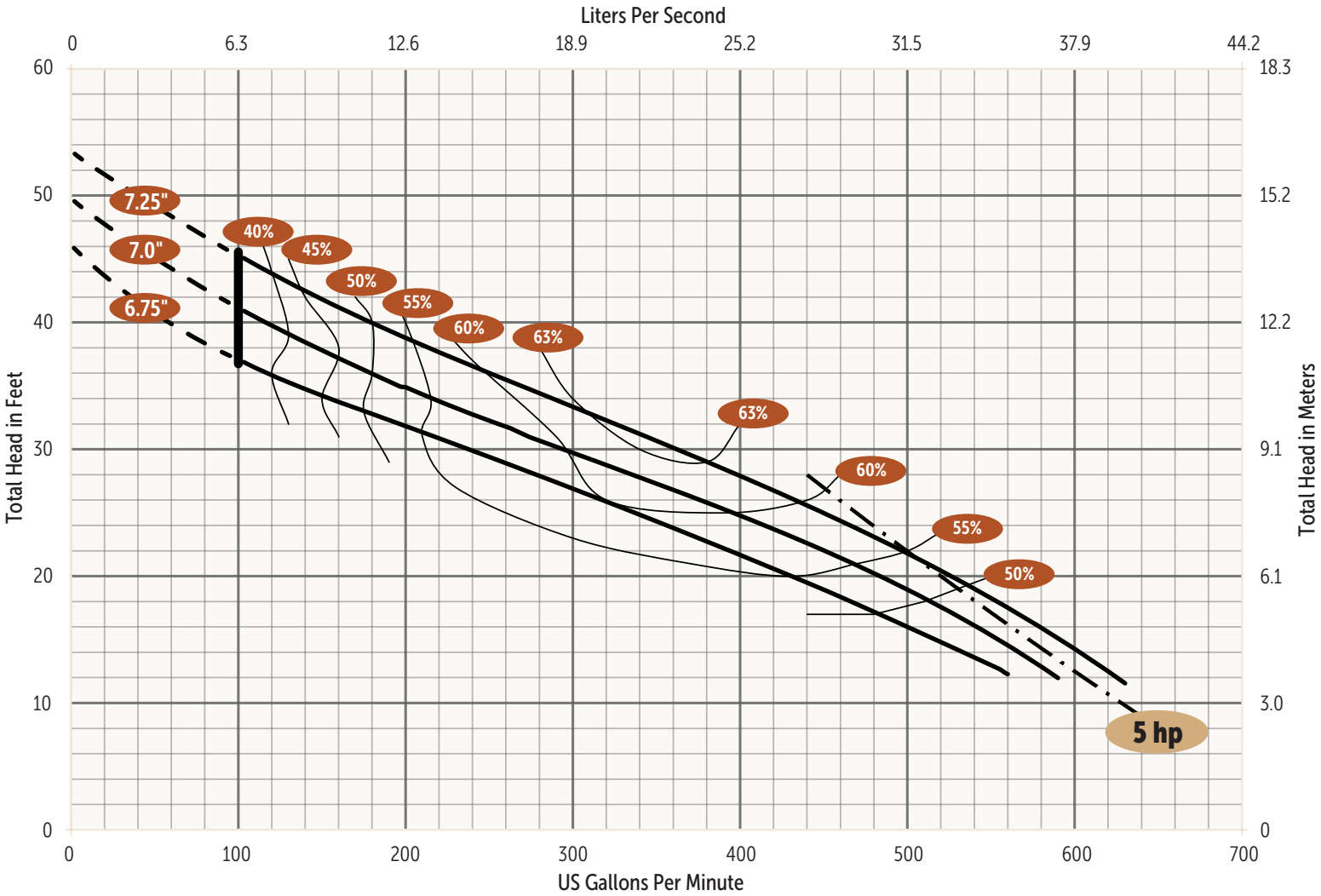

Stated efficiency values are hydraulic efficiency. Wire-to-Water (total) efficiency information is available upon request.

Pumps must operate within the Allowable Operating Range (AOR) which is indicated by the solid performance curve on the chart. Pumps operating outside the AOR can be prone to excessive vibration, cavitation, poor efficiency, and may exceed nameplate amperage ratings..

Specifications are subject to change without notice.

Copyright © Liberty Pumps, Inc. 2026
All rights reserved. LLIT3LM05-PC R04/26

7000 Apple Tree Avenue - Bergen, NY 14416
Phone 800-543-2550 - Fax 585-494-1839 - www.LibertyPumps.com/LEP

Liberty Pumps
Engineered Products

Dimensional Data

3LM05-Series - 60 Hz

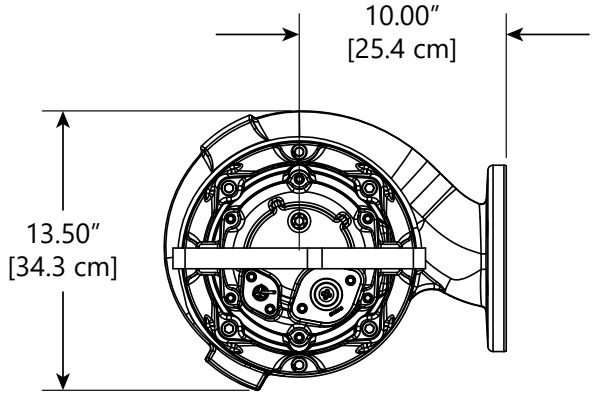

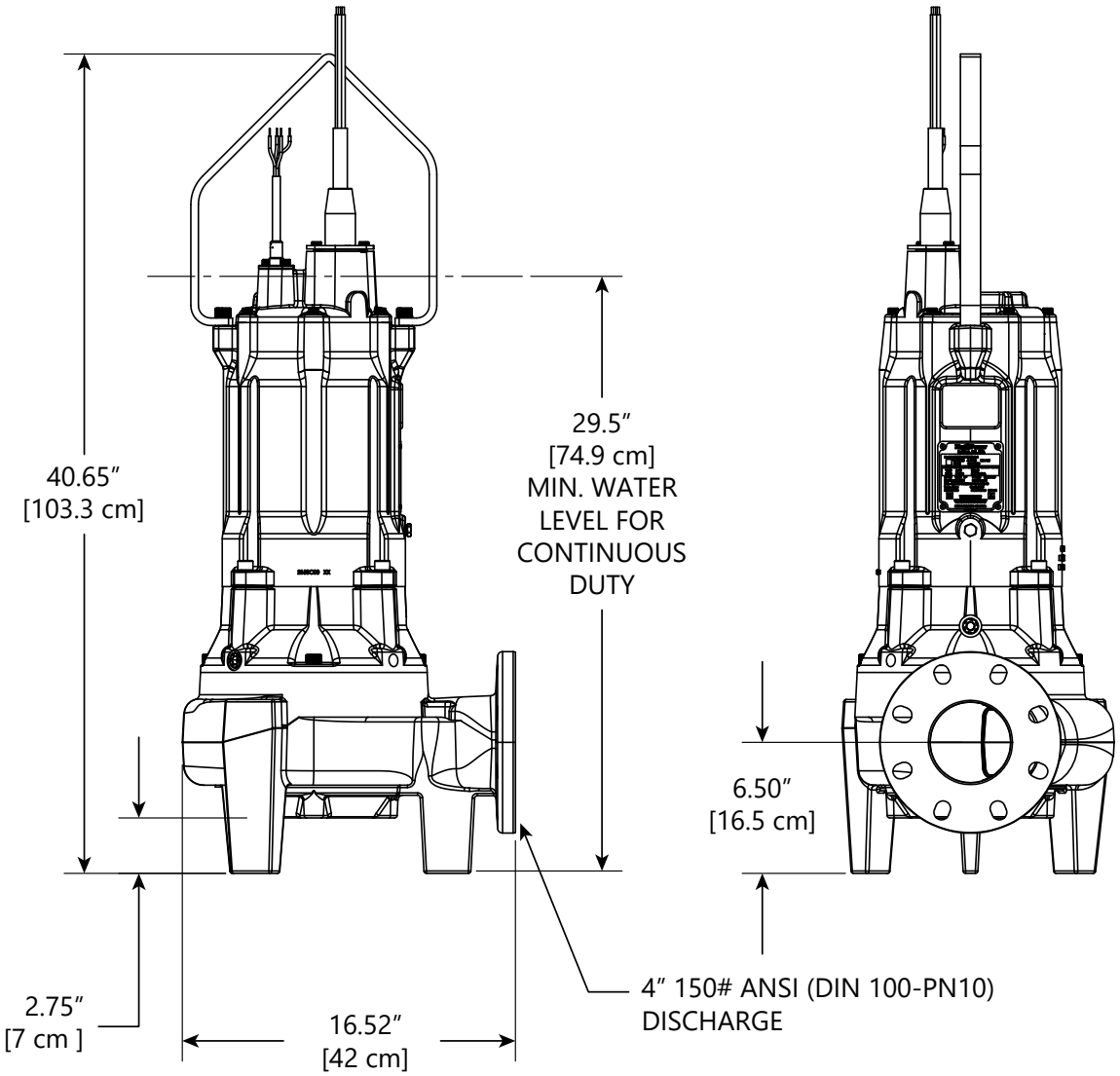

Specifications are subject to change without notice.

Copyright © Liberty Pumps, Inc. 2026
All rights reserved. LLIT3LM05-DD R04/26

7000 Apple Tree Avenue - Bergen, NY 14416
Phone 800-543-2550 - Fax 585-494-1839 - www.LibertyPumps.com/LEP

Liberty Pumps®
Engineered Products

Specifications and Construction

3LM05-Series - 60 Hz

GENERAL

The contractor shall provide labor, material, equipment, and incidentals required to provide _____ (QTY) sewage pumps as specified herein. The pump models covered in this specification are model 3LM052A 1-phase, and 3LM053A, 3LM054A, and 3LM055A 3-phase monovane pumps. The pump furnished for this application shall be model _____ as manufactured by Liberty Pumps.

OPERATING CONDITIONS

Each submersible pump shall be rated at 5 hp, _____ volts, _____ phase, 60 Hz, 1750 RPM. The unit shall produce _____ GPM at _____ feet of total dynamic head.

The submersible pump shall be capable of handling residential and commercial sewage with 3" solids handling capability. The 3LM05-Series submersible pump shall have a shut-off head of 54 feet and a max flow of 630 GPM @ 12 feet of total dynamic head.

CONSTRUCTION

Each centrifugal sewage pump shall be equal to the certified 3LM05-Series pumps manufactured by Liberty Pumps, Bergen NY. The casting enclosing the motor shall be constructed of Class 30 cast iron. The motor housing shall be oil-filled to dissipate heat. Air-filled motors shall not be considered equal since they do not properly dissipate heat from the motor. Mating parts shall be machined and sealed with a Buna-N O-ring. All fasteners exposed to the process fluid shall be stainless steel. The motor shall be protected on the top side with a sealed cast iron cord entry plate, which is potted to prevent water from entering through the cord. The motor shall be protected on the lower side with a dual mechanical seal arrangement and an oil-filled intermediate chamber. The upper (inner) seal shall be a two-piece mechanical seal with a graphite impregnated carbon rotating and a silicon carbide stationary face. The lower (outer) seal shall be a two-piece mechanical seal with silicon carbide faces. The upper and lower bearings shall be sized to properly withstand radial and thrust loads produced throughout the full operating range of the pump.

POWER AND CONTROL CORD

The submersible pump shall be supplied with 35, 50, or 100 feet of a multi-conductor cord of type W for the 3LM052A model, and type SOOW for the 3LM053A, 3LM054A, and 3LM055A models. These type W and SOOW power cords carry a voltage rating of 600 V, a temperature rating of 90°C, have oil-resistant insulation, are water- and weather-resistant, UL-listed, and CSA-approved.

The power cord shall be sized for the rated full load amps of the pump for continuous duty in accordance with the NEC®. A separate type SOOW control cord of equal length shall also exit the pump. Both the standard quick-connect power and control cords shall have a molded Neoprene plug held in place with a stainless steel compression plate. The plugs engage a receptacle with molded-in electrical pins, all of which shall be protected by a cast iron housing. The motor shall be protected from moisture via these two sealing methods: the plug to receptacle and receptacle to cast iron housing. The power and control cord leads shall be connected to the motor leads via a terminal block. The standard quick-connect cords offer quick cord replacement without the need to send the entire pump to an authorized repair facility and allows for pump maintenance without disturbing electrical boxes or control panels.

HEAVY-DUTY QUICK-CONNECT CORDS

(OPTIONAL)

An optional heavy-duty quick-connect cords shall offer quick cord replacement without the need to send the entire pump to an authorized repair facility. This shall also allow for pump maintenance without disturbing electrical boxes or control panels. A terminal block shall be used for internal wire connections.

MOTOR

The motor shall be oil-filled, inverter duty, Class H insulated, NEMA® A design (3-phase models), and rated for continuous duty. Since air-filled motors are not capable of dissipating heat efficiently, they shall not be considered equal. The midchamber design utilizing **MidTherm™** Cooling technology shall allow for oil in the motor chamber to reject heat to the pumped media and provide cooling to the motor. This motor design shall provide significantly reduced operating temperatures. Pumps requiring an auxiliary cooling means shall not be considered equal.

The motor shall be constructed to meet IE3 premium efficiency standards in accordance with NEMA® MG1. The copper stator windings shall be insulated with moisture-resistant Class H insulation materials, rated for 180°C per NEMA® MG1 1.66. The maximum continuous temperature of pumped liquids shall be 40°C. The winding operating temperature at rated horsepower and service factor shall be a maximum of 125°C @ 40°C ambient.

Motor shall have UL-approved thermostats mounted directly on the stator windings. Motor shall have two thermostats on the 3LM052A model, and three thermostats, one on each phase, on models 3LM053A, 3LM054A, and 3LM055A. The thermostat leads of the control cord shall be connected to a motor control relay in the control panel.

Motor service factor shall be 1.3 under normal conditions and 1.0 when operated on a Variable Frequency Drive (VFD) per MG1 standard. Motor shall have a voltage tolerance of ±10% from nominal. Motor shall meet the requirements of NEMA® MG1 Part 30 and 31 for operation on Pulse Width Modulation type VFD with inverter duty rated magnet wire and insulation. Motor shall be capable of handling up to 30 evenly-spaced starts per hour without overheating.

Specifications and Construction

3LM05-Series - 60 Hz

BEARINGS AND SHAFT

The shaft shall be supported by two ball bearings. The top bearing shall be a deep groove radial contact ball bearing and the lower bearing shall be a double row angular contact ball bearing designed to handle the radial and axial forces incurred by pumping. The lower bearing shall be positively retained by a threaded bearing retaining nut, which eliminates any axial movement or rotation of the outer bearing race. Both bearings shall be permanently lubricated by the oil that fills the motor housing. Pump designs requiring scheduled bearing maintenance shall not be considered equal. Pumps with single row lower bearings or sleeve bearings shall not be considered equal. The bearing system shall be sized to provide a minimum of 100,000 hours B10 bearing life throughout the operating range of the pump. Pumps that only provide a 50,000 hours B10 bearing life shall not be considered equal.

The motor shaft shall be made of 416 stainless steel. The motor shaft shall be constructed from a single piece of stainless steel. Spin-welded shafts shall not be considered equal. The shaft shall be designed to withstand the maximum torque and radial loads present during start-up and normal operation. Shafts of carbon steel or chrome-plated shafts shall not be considered equal

SEALS

The pump shall have two shaft seals separated by an oil chamber. Pumps utilizing single seal technology shall not be considered equal. A leak detection probe shall be positioned in the oil chamber and shall allow for continuous monitoring for lower (outer) seal failure. The lower seal shall be a two-piece design that is easily serviceable. Shaft seals shall not require scheduled maintenance. The upper (inner) seal shall be graphite impregnated carbon on silicon carbide and the lower seal shall be silicon carbide on silicon carbide. Both seals shall include stainless steel housings and Viton® elastomers. Lower seals shall be optionally available in tungsten carbide.

IMPELLER

The impeller shall be ASTM Class 30 cast iron. The impeller shall be dynamically balanced by means of counterweights cast into the impeller. A single channel monovane design provides a smooth path through the impeller for solids to pass without getting caught or snagged. Impeller shrouds are designed to operate in close proximity to the pump volute casing to prevent solids from entering the seal area or recirculating back to the intake. **ClearNotch™** clean out notches shall be present in the impeller and volute casing to prevent solids from building up between the impeller shrouds and volute casing. The impeller intake snout shall ride in a serviceable impeller wear ring of C93200 bronze, 60 Brinell Hardness (500 kg load). The impeller shall be keyed and bolted onto the tapered motor shaft.

SHAFT GROUNDING BRUSH

Three-phase pumps shall be equipped with a shaft grounding brush. Pumps not utilizing a current mitigation technology shall not be considered equal.

CONTROL PANEL

All 3LM05-Series pumps require a control panel. The control panel shall be equipped with circuit breakers and adjustable overload devices to protect against excess current or electrical problems. Model 3LM052A shall additionally require a start and run capacitor in the control panel. This device shall be sized appropriately for the pump model(s) being controlled.

The control panel shall include thermal overload relay(s) that shall shut down the pump in the event the thermostats in the motor open. Thermostats are designed to open at 125°C.

The control panel shall include a seal fail monitoring device that shall indicate a primary seal failure. The seal fail monitoring device shall be capable of monitoring the resistance of the seal failure probe in the pump. The sensitivity of the seal fail monitoring device shall be adjustable from approximately 1kΩ to at least 250kΩ.

The control panel for 1-phase models shall include a motor start circuit that automatically engages and disengages the start windings of the 1-phase motor. The motor start circuit shall consist of a properly sized relay which engages and disengages the motor start windings. A solid state start switch shall monitor start winding voltage and shall control the aforementioned relay. The start and run capacitors shall be properly sized per the motor specifications. A bleed resistor shall be used on the start capacitor to avoid unwanted voltage spikes during startup. Capacitor start/run components (Kit#K001864) are available for 1-phase models using a non-Liberty Pumps control panel.

Pump Model	Voltage	Control Panel Model			
		Fiberglass Enclosure		Stainless Steel Enclosure	
		Duplex	Simplex	Duplex	Simplex
3LM052A	230	LED2-40A	LES2-40A	LEDS2-40A	LESS2-40A
3LM053A	200/230	LED3-35	LES3-35	LEDS3-35	LESS3-35
3LM054A	460	LED3-35	LES3-35	LEDS3-35	LESS3-35
3LM055A	575	LED5-20	LES5-20	LEDS5-20	LESS5-20

QUALITY CONTROL

The pump shall be manufactured in an ISO® 9001 certified facility. Manufactured in the USA with US and global components.

SUPPORT

The pump shall have cast iron support legs, enabling it to be a freestanding unit. The legs shall be high enough to allow solids and long stringy debris to enter the pump inlet.

Liberty Pumps
Engineered Products

Specifications and Construction

3LM05-Series - 60 Hz

PROTECTIVE FINISH

The exterior of the casting shall be protected with corrosion-resistant baked-on powder coat.

TESTING

The pump shall have a ground continuity check and undergo a hi-pot test for electrical integrity, moisture content, and insulation defects. The motor housing and midchamber shall be pressurized and an air leak decay test performed to ensure integrity of the assembled unit. The pump shall be run at rated voltage to verify current, performance curve and monitor operation. Certified performance testing is available upon request.

APPLICATIONS

- Municipal Engineered Lift Stations
- Storm Water Removal
- Wastewater Transfer
- Industrial Wastewater
- Treatment Plants

MATERIAL FEATURES
PUMP:

- Solids - 3" Spherical Capability
- Discharge - 4" Horizontal 150# ANSI® (DIN 100-PN10)
- Seals - Dual Mechanical with Viton® Elastomers, Upper (Inner) - Graphite Impregnated Carbon on Silicon Carbide; Lower (Outer) - Silicon Carbide on Silicon Carbide
- Construction - Cast Iron ASTM A48, Class 30, 30,000# Tensile Strength, Protected with a Corrosion-Resistant Baked-on Powder Coating
- Hardware - 316 Stainless Steel
- O-ring Seals - Buna-N
- Cast Iron Impeller - Precision Balanced Monovane with **ClearNotch™** Self-cleaning Features
- Thermal Sensors and Moisture Detection System
- Optional:
  - Heavy-duty Quick-connect Power and Control Cords
  - Cord Length Options (feet) - 35, 50, 100
  - Trimmed Impeller
  - Tungsten Carbide on Tungsten Carbide Lower Seal

MOTOR:

- 1-Phase - 230 Volt, 1750 RPM
- 3-Phase - 200/230, 460, 575 Volt, 1750 RPM
- Inverter Duty, Class H Insulation, NEMA® A Design (3-phase models)
- Oil-filled Motor Housing
- Cast Iron Housing with **MidTherm™ Cooling** Deep Sump Design for Improved Heat Dissipation
- Continuous Duty Operation
- Bearings
  - Upper - Single Row Deep Groove Radial Contact
  - Lower - Double Row Angular Contact

LIMITED WARRANTY

Liberty Pumps, Inc. warrants that pumps of its Engineered Product line are free from all factory defects in material and workmanship for a period of 18 months from the date of installation or 24 months from the date of manufacture, whichever occurs first, and provided that such products are used in compliance with their intended applications as set forth in the Liberty Engineered Products specifications and technical manuals. The date of installation shall be determined by a completed pump start-up report and warranty registration form.

A pump startup report, filled out by a qualified installer, is required for warranty to take effect. The report must be submitted within 30 days from the installation date and submitted through the Liberty Pumps website. During the warranty period, the manufacturer's obligation, and at its discretion, shall be limited to the repair or replacement of any parts found by the manufacturer to be defective, provided the product is returned freight prepaid to the manufacturer or its authorized service center, and provided that none of the following warranty-voiding characteristics are evident:

The manufacturer shall not be liable under this Warranty if the product has not been properly installed or maintained in accordance with the printed instructions provided; if it has been disassembled, modified, abused or tampered with; if the pump discharge has been reduced in size; if the pump has been used in water temperatures above those shown in the specifications; if the thermal overload(s) and seal moisture probe(s) have not been properly connected (where equipped); if the pump has been used in water containing sand, lime, cement, gravel or other abrasives; if the product has been used to pump chemicals or hydrocarbons; if the product has been moved from its original installation location, or if the label bearing the serial and code number has been removed.

Liberty Pumps, Inc. shall not be liable for any loss, damage or expenses resulting from installation or use of its products, or for consequential damages, including field labor costs, travel expenses, rental equipment, costs of removal, reinstallation or transportation to and from the factory or an authorized Liberty Pumps repair facility.

There is no other express warranty. All implied warranties, including those of merchantability and fitness for a particular purpose, are limited to 18 months from the date of installation or 24 months from the manufacturing date. This Warranty contains the exclusive remedy of the purchaser, and, where permitted, liability for consequential or incidental damages under any and all warranties are excluded.

Specifications are subject to change without notice.

Copyright © Liberty Pumps, Inc. 2026
All rights reserved. LLIT3LM05-SC R04/26

7000 Apple Tree Avenue - Bergen, NY 14416
Phone 800-543-2550 - Fax 585-494-1839 - www.LibertyPumps.com/LEP